Communications in Distributed Systems

Dr. Jaydeep Das
Assistant Professor
School of Computer Engineering
KIIT Deemed to be University
Bhubaneswar

UNIT-2: Communications in Distributed Systems

- Basics of Communication Networks
- Layered Protocols
- ATM Models
- Client-Server Models
- Blocking and Non-Blocking Primitives
- Buffered and Un-Buffered Primitives
- Reliable and Unreliable Primitives
- Message Passing
- Remote Procedure Calls

#1: Asynchronous Transfer Mode (ATM)

- ATM is the cell relay protocol designed by ATM forum and adopted by ITU-T
- It is a cell switching and multiplexing technology that combines benefits of both circuit switching and packet switching
- ATM working principles
  - Sender first establishes a connection (virtual circuit) to the receiver(s)
  - A route is determined from sender to receiver
  - Routing information is stored in the switches along the way
  - Packets can be sent through this connection by sender
  - Packets are chopped into small fixed-sized units (**cell**) by hardware
  - Routing information purged from switches when connection is not required

ATM Advantages

- A single network is used to transport voice, data, broadcast television, videotapes, radio.
- It is used for video conferencing, video-on-demand, teleconferencing, access to thousands of remote databases
- Cost saving
- ATM uses cell switching which handles both point-to-point and multicasting efficiently
- ATM allows rapid switching as its cell (or packet) size is fixed

#2 ATM Layers

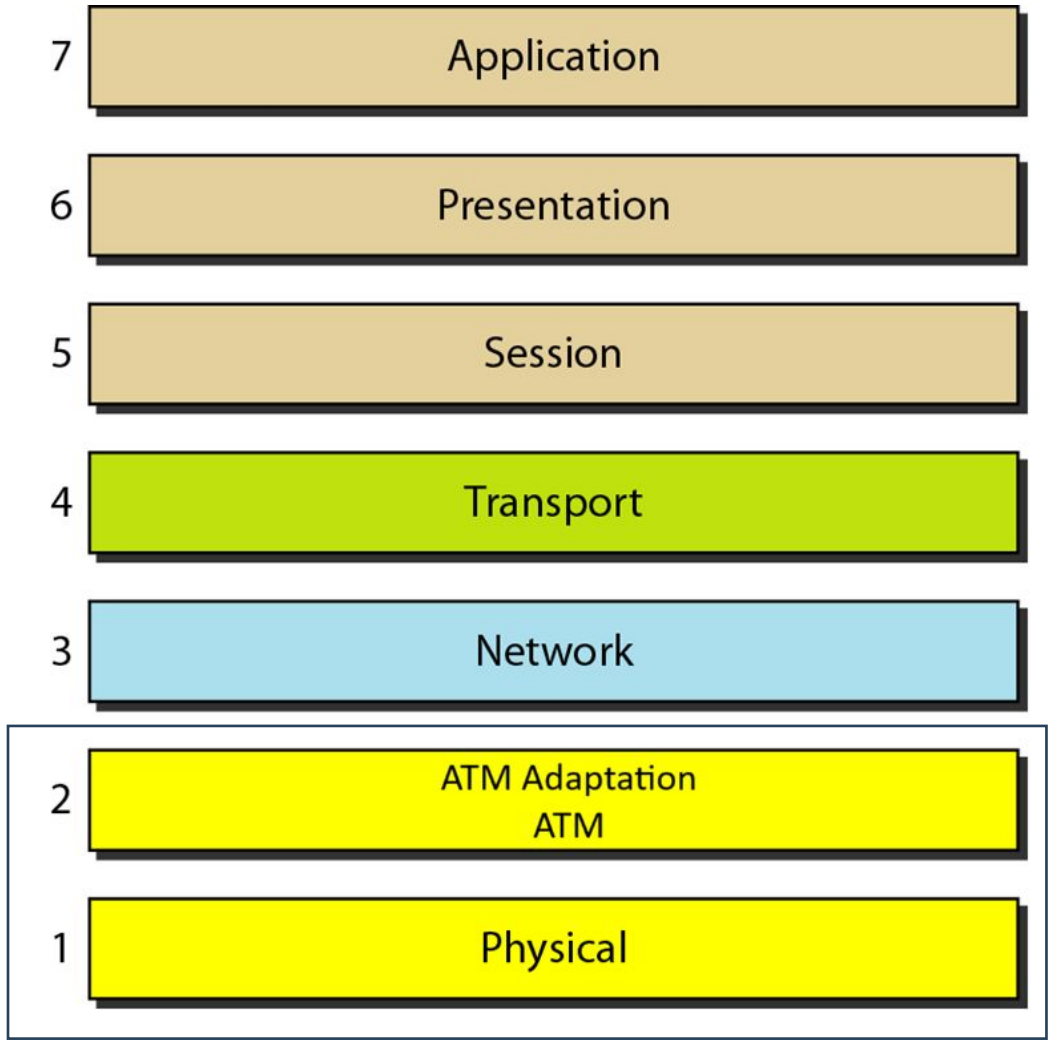

ATM Reference Model

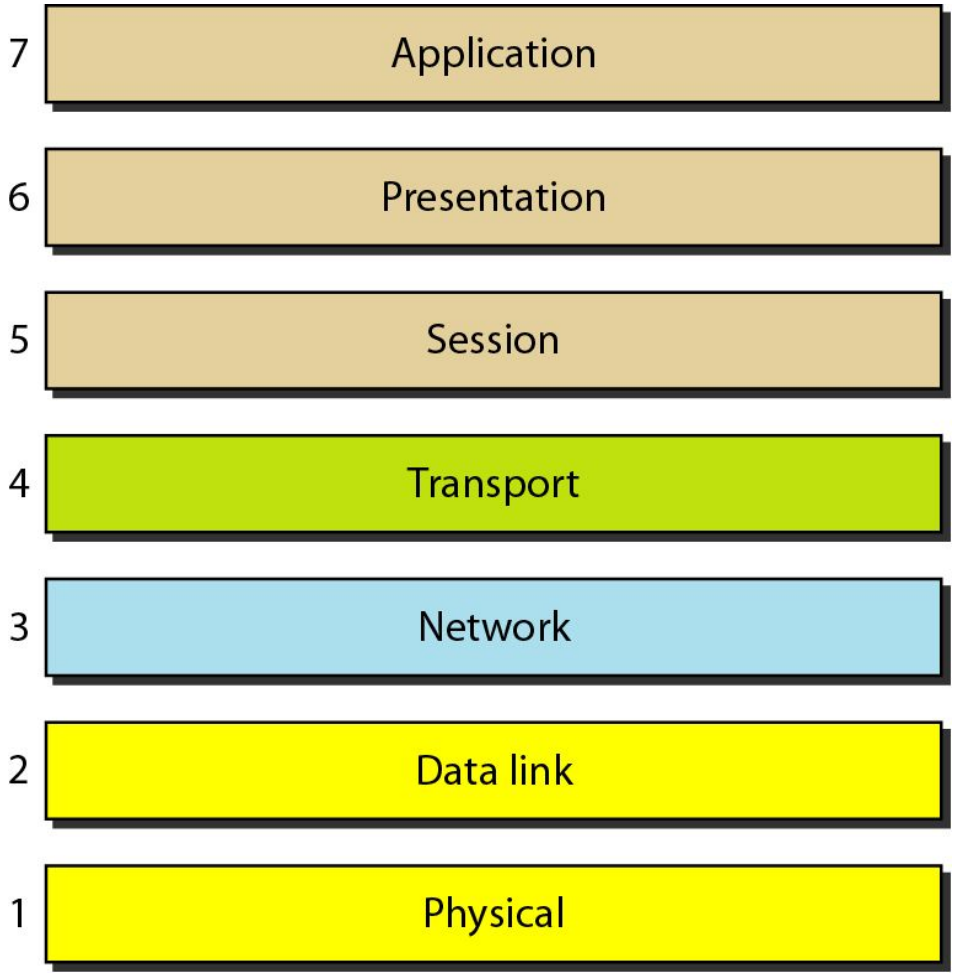

ISO/OSI Model

2.1: ATM Physical Layer

- In the Physical Layer, ATM is synchronous as it transmits empty cells while no data to be send.
- It uses SONET (Synchronous Optical NETwork) in physical Layer.
- In SONET, frame size is 810 bytes (overhead: 36 bytes, payload: 744 bytes), gross data rate 51.840 Mbps.
- Basic 51.840 Mbps channel is called OC-1.
- OC-12 and OC-48 are used for long-haul transmission.

2.2: ATM Layer

- GFC is used for flow control.
- VPI and VCI together identify path and circuit of a cell
- Payload type distinguishes data cells from control cells
- CLP identifies the less important cells which drop if congestion occurs
- CRC identifies redundancy and correct it

Virtual Path Identifier

Cell Loss Priority

GFC (4 bits)	VPI (8 bits)	VCI (16 bits)	Payload Type (3 bits)	CLP (1 bit)	CRC (8 bits)

Generic Flow Control

Virtual Channel Identifier

Cyclic Redundancy Check

Figure: User-to-Network Cell Header Layout

2.3: ATM Adaptation Layer

- Adaptation Layer has four classes
  - Constant bit rate traffic (for audio and video)
  - Variable bit rate traffic but with bounded delay
  - Connection-oriented data traffic
  - Connectionless data traffic
- Simple and Efficient Adaptation Layer (SEAL)
  - 1 bit of ATM *header*, 1 bit of *Payload Type*
  - Payload Type field is set to 1 for last cell, otherwise 0
  - Last cell contains 8 bytes tailer with four fields
  - Tailer contains packet length (2 bytes), checksum (4 bytes)
  - There are no use of first two fields (1 byte each field)

#3: ATM Switching

- Network built with 4 switches and 8 computers
- Cells can be switched different computers by traversing switches
- Switching fabric connects input and output lines and ensures parallel switching
- Head-of-line blocking problem
- <u>Solution</u>: Keep copy of a cell in a output buffer queue

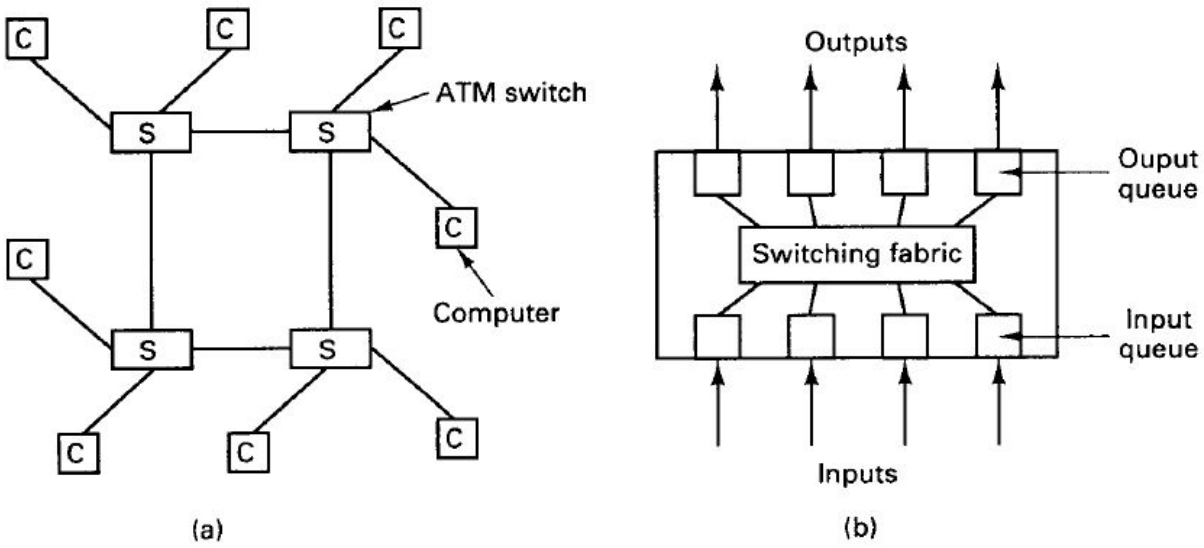

(a) ATM Switching Network (b) Inside of One Switch

#4: ATM Implications for Distributed Systems

- High-speed network but latency remains
- Flow control
- Transcontinental Delay
- Cell drops during congression

#5: ATM Advantages

- High-speed, fast-switched integrated data, voice, and video communication.
- A standards-based solution formalized by the International Telecommunication Union (ITU)
- Interoperability with standard LAN/WAN technologies
- QoS technologies that enable a single network connection to reliably carry voice, data, and video simultaneously.

Q&A

Homework Questions

1) State advantages of ATM over traditional switching technology.
2) Describe *head-of-line blocking* problem in ATM switching network. What can be the possible solution?
3) What is the probability that a totally garbled ATM header will be accepted as being correct?
4) An ATM system is transmitting cells at the OC-3 rate. Each packet is 48 bytes long, and thus fits into cell. An interrupt takes 1 microsecond. What fraction of the CPU is devoted to interrupt handling? Now repeat this problem for 1024-byte packet.

Thank You!